ANEES

FURNITURE & DESIGN

WESTBURY DINING TABLE ROUND

WESTBURY DINING TABLE ROUND

DIMENSIONS 54 D x 29.5 H

SPECIES Walnut or Oak

METAL BASE Dark Bronze finish

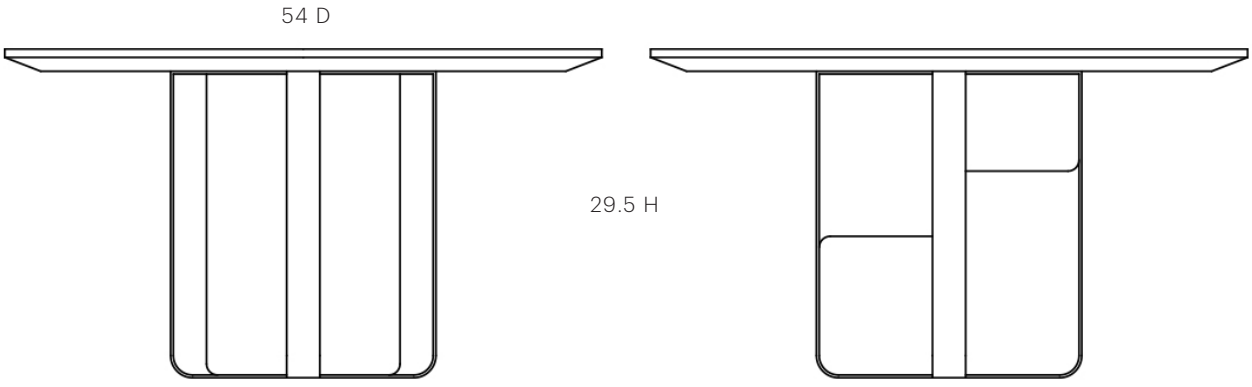

1500 South Western Avenue Chicago, IL 60608 Phone:312.243.2919 Fax:312.243.2920 aneesupholstery.com info@aneesupholstery.com